Pulsed Source of Intensive Two-Velocity Beam of Metallic Ions

S.P. Gorbunov, V.I. Krasov, V.L. Paperny, and Yu.Yu. Rusakov

Irkutsk State University, 20 Gagarin Blvd., Irkutsk, 664003 Russia
Phone: 7(3952)242196, fax: 7(3952)242194, e-mail: paperny@math.isu.runnet.ru

Abstract – Ion velocities in cathode plasma flow of a low voltage vacuum spark have been studied experimentally for peak discharge currents of 1–10 kA. Experiments have been performed using the time-of-flight technique at different ranges of ion collector from the discharge gap. It is shown that there are two ion components in the cathode flow. The slow one presents the bulk of ion distribution and at low peak discharge current its velocity is closed to the convenient value for vacuum arc. The fast components' velocity is a few times higher than one for slow ions and amplitude of current for these ions at a range of 10 cm from the discharge gap was closed to one for the slow component. As the distance increases, peak of the fast ions decreases sharper than one for the slow component. Amplitudes of signals and mean velocities of both ion components increase sharply with the discharge current. The fast ion component corresponds, apparently, to beam of the multiply charged ions that had been found by the authors earlier. Total amount of these ions attains, approximately, 10^{13} ions per a pulse.

1. Introduction

It is known that vacuum discharges are sources of jets of the multiply charged ions of a cathode matter that move towards anode. Production of the ions is originally due to an explosion emission from a cathode surface and the following ionization of the atoms within plasma regions of a micron scale located in the immediate vicinity of the cathode [1]. The plasma microjets expand into the vacuum ambient, in this process the mean ion velocity (about of 10^4 m/s) and the mean ion charge state (+1 – +3), depend principally just on the cathode matter [2, 3]. It has been shown also that velocities of the different ion species are the same because of the interspecies friction [4]. This stage of ion acceleration occurs in dense plasma of the microjets at a distance less than 10^{-1} mm from the cathode surface and parameters of the ion component are conserved on the following merging of the microjets into a macroscopic plasma flow. Results of the model calculations are closed to the experimental data for vacuum arcs at a wide range of the parameters under the discharge current being less than 1 kA [5].

There is a more complicated picture for pulsed type of the discharges. Characteristics of the ion jets in a number of experiments here were closed to ones obtained in arcs. Nevertheless, Byon and Anders [6] at recent experiments with pulsed vacuum arc have observed for a wide set of cathode matters the beams of accelerated ions together with the main ion flow, which had the standard velocity. Authors of the given work have also observed a presence of the fast and the slow ion components in cathode plasma flow of a low voltage vacuum spark and a significant enhancement with the discharge current (up to six times as compared with a standard vacuum arc) in velocity of the slow ions [7]. These results suggest presence of an additional acceleration of the cathode ions that occurs not nearby the cathode but rather in body of a cathode flow. Studies of the acceleration are both of fundamental interest and have also different applications.

In this work we present results of the detailed time-of-flight measurements of both the fast and the slow ion components revealed earlier in [8]. Subject of the studies is to establish characteristics of the additional ion acceleration in order to control parameters of the ion beam.

2. Experimental Set-up and Results

Experiments were carried out with a low-energy vacuum spark (see Fig. 1). The electrode arrangement was mounted in a 100 mm long and 50 mm diameter stainless steel cylindrical chamber with a drift tube attached. The arc was run between of a wire-type copper cathode of diameter $D_c = 1$ mm and a grounded grid anode with 60% geometrical transparency, which was placed at a distance $d = 9$ mm apart from the cathode. The discharge was ignited by a high-voltage breakdown at the top surface of a dielectric insert,

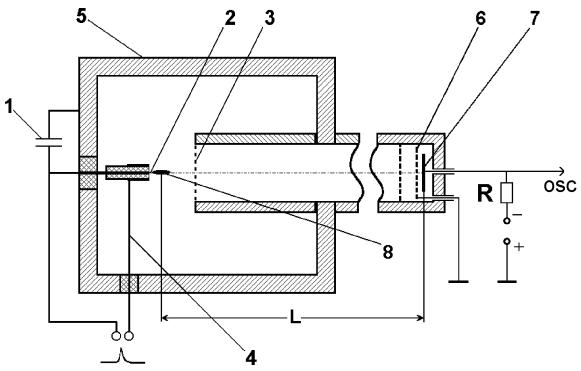

Fig. 1. Scheme of the experiment. 1 – capacitor; 2 – cathode; 3 – anode; 4 – igniter; 5 – vacuum vessel; 6 – suppressing grid; 7 – collector; 8 – plasma jet

which separated the cathode and the igniter. A low-inductance capacitor ($C = 2\mu F$) sustained the discharge so that the total inductance of the discharge circuit was about 40 nH. The capacitor was loaded up to a voltage that was varied through a range of values $U_0 = 400–2500$ V. A Rogovsky coil directly in the cathode circuit measured the discharge current. The oil-free pump pumped the chamber down to a pressure of $(5–8)\cdot 10^{-6}$ Torr. The plasma was generated at the front face of the cathode, expands through the anode grid and entered a drift tube connected to the chamber. After passing the tube the cathode ions were registered with a collector biased with a negative potential, which was equal to – 400 V. The collector was placed at three distances apart from the anode: $L = 10$, 35 and 95 cm.

The following results were obtained after measurements. Fig. 2 presents typical waveforms of the discharge currents and corresponding signals from collector. One can see that two groups of ions have been recorded at 10 and 35 cm apart the cathode.

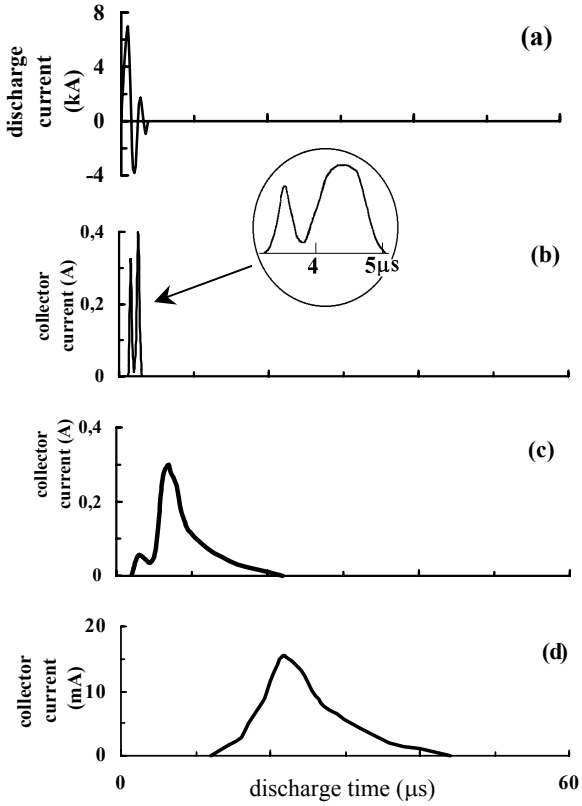

Fig. 2. The waveform of the discharge current (a) and signals of collector for length of ion flight $L = 10$ cm (b), 35 cm (c) and 95 cm (d)

Characteristics of these groups of ions are as follows. First, one can see from Fig. 2b that at short distance from cathode the value of peak, which corresponds to the fast ions, is closed to one for the slow ions and width of the first peak is less than that of the second one.

These results suggest that (i) the total abundances of both ion components a short distance from a region of their production (i.e. the interelectrode gap) are comparable with each other, (ii) the length of interval of production for the fast ions or/and the initial dispersion of their velocities, are rather less than these for the slow ions. It is seen also from Fig. 2b that with short length of drift tube, the delays of peaks corresponding to both ion components are comparable with duration of the discharge, i.e. with length of the ion production. Hence, the accuracy of derivation of mean ion velocities for both components from these data is insufficient.

Figures 2c, d show that width of both ion peaks increases with length of the drift tube. Apparently, that is due to dispersion of the initial ion velocities. Amplitudes of both ion peaks decreases, but one for fast ion component decreases rather sharper, so that at length of the tube being of 90 cm this peak decreases lower of the record threshold.

From waveforms like those presented in Fig. 2 the mean values of velocities and amplitudes for both ion components under the given capacity voltage have been obtained. Let us consider this procedure in detail. We suggest that the slow ion component presents the main plasma flow and, in agreement with the known experimental results [1], that the flow of ions from the cathode is proportional to the discharge current. Hence, the bulk of ions of the cathode plasma is produced in a peak during the first semi-period of the discharge current oscillations, when amplitude of the current exceeds significantly the ones in the following semi-periods. It is natural also to suggest that the additional acceleration occurs essentially within the inter-electrode gap (9 mm), where the discharge current closes. Hence, we took $L = 10$, 35 and 95 cm as the lengths of the ion path for the time-of-flight measurements. Delay between peak of ion signal at the collector and the first peak of the discharge current matches the time-of-flight of the ions, for distance L. From this delay and length of the flight path, the mean velocity of bulk of the cathode jet ions could be calculated.

We suggest also that the fast ion component represents the multiply charged and accelerated ions, which we have found earlier [8]. Dependences of velocities of the fast and slow ion components on the discharge current are depicted in Fig. 3. The similar dependence for mean velocities of the highly charged ions is presented in the figure, which was estimated from measurements by an ion energy analyzer in [8].

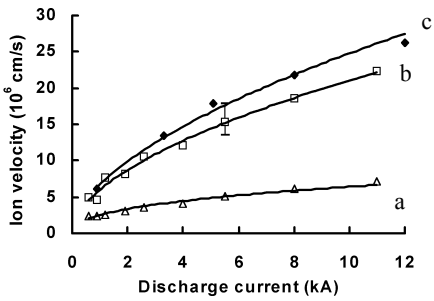

Fig.3. Dependences on the discharge current of ion velocity for slow (a) and fast ion component (b) and velocity of multiply charged ions found in [12] (c)

Fig. 3 shows that there is a good agreement throughout the range of measurements between velocities for flow of the fast ions in the collector measurements presented here and velocity of the highly charged and accelerated ions that have been found in [8]. That result supports suggestion on the identical nature of both ion flows.

One can estimate from data presented in Fig. 2 the ion currents for both the fast and slow ions. These estimations have been performed throughout the range of variation of the discharge current and are depicted in Fig. 4. Note, that in Fig. 4 just the underestimations of the currents are presented, where the geometrical transparency of the grids (about 0.6 for each one) is accounted.

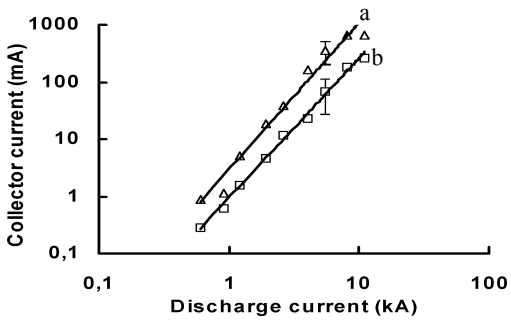

Fig.4. Peak of the collector current at a range of 35 cm from the discharge gap versus the discharge current for the slow (a) and fast (b) ion components

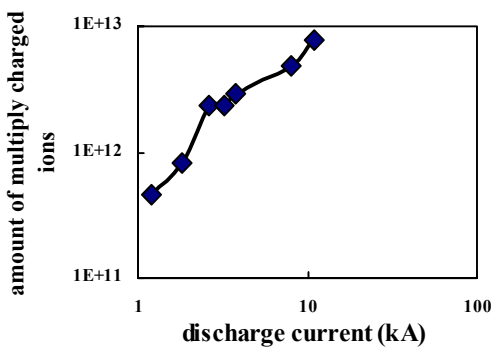

Fig.5. Amount of the multiply charged ions versus peak of the discharge current

Also, total amount of multiply charged ions per a pulse has been derived from signal of the collector that was placed 10 cm apart the interelectrode gap. It was derived with regard to enhancement of mean charge state for these ions from $Z = +4.5$ at peak discharge current of 1.2 kA up to $Z = +9.3$ at the current of 15 kA [12]. From Fig. 5 it is seen that amount of these ions rises sharply with the discharge current so that is attains about 10^{13} ions/pulse with the ion mean charge close to +9 at the discharge current of 10 kA.

3. Discussion

The results presented show that there are two ion components in cathode plasma jet of a low voltage vacuum spark. Mean velocities and peak currents of both components are controllable within a wide range of values by variation of the discharge current. The similar character of the dependences for both components pointed to the similar nature of the acceleration. We suggest that this additional acceleration is due to magnetic constriction of plasma flow with its own magnetic field [7].

The effect revealed in this paper allows using the low voltage vacuum spark as a plasma source for deposition of the covers, which have the properties depending on velocity of ions at the deposition process. Also, one can use the plasma source for assisting plasma deposition where the fast ion component (with energy up to 10 keV) treats the film that is deposited with main slow component.

Note, that the discharge under consideration could be applied as a source of the multiply charged ions for the first stage of a power ion accelerator. In this case the high value of mean ion charge state provides the attainment of high energies of the accelerated ions under a moderate acceleration voltage.

References

[1] G.A. Mesyats, *Ectons in a vacuum discharge: breakdown, spark and arc*, Moscow, Nauka, 2000.
[2] A. Anders, Phys. Rev. E. **55**, 969 (1997).
[3] A. Anders and G.Yu. Yushkov, J. Appl. Phys. **91**, 4824 (2002)
[4] G.Y. Yushkov, A.S. Bugaev, I.A. Krinberg, and E.M. Oks, Rus. Phys. Doklady **378**, 41 (2001).
[5] I.A. Krinberg, M.P. Lukovnikova, and V.L. Paperny, Journ. Exp. Theor. Phys**. 70**, 451 (1990).
[6] E. Byon, A. Anders, J. Appl. Phys. **92**, 824 (2003).
[7] S.P. Gorbunov, S.P. Krasov, I.A. Krinberg, and V.L. Paperny, Plasma Sources Sci. Technology **12**, 313 (2003).
[8] M.F. Artamonov, V.I. Krasov, and V.L. Paperny, Journ. Exp. Theor. Phys. **120**, 1401 (2001).