Ion-plasma Assisted Influence on Composite Coatings Deposition by Magnetron Sputtering

V.M. Savostikov, D.P. Borisov, E.V. Gromyshev, U.P. Pinzhyn*

State Organization "Technotron"; 634040, Tomsk, Visotskiy St, 33;
tel/fax (382-2) 64-40-31; E-mail: sova@ oitc.tomsk.ru
** Tomsk State University; 634000, Tomsk, Lenina Av, 36; tel. (382-2) 531569; E-mail: pinzhin@phys.tsu.ru*

Abstract – In this work research results of composite target Ti–B–Si magnetron sputtering combined with assisted effect of gas plasma arc discharge with hot cathode are given. Double positive effect of gas plasma generator application is found: magnetron discharge modes operation and simultaneous influence on compound and properties of deposing coating. The found effects of positive assisted influence on the initialization and maintenance of magnetron discharge even at voltage and working gas pressure values when usual (single) magnetron sputtering is not initialized are interpreted by the authors as "non-self-sustained magnetron discharge".

I. Introduction

Composite (multielements and multiphase) coating deposition is one of the most perspective ways of materials surface characteristics modification. Using composite structures of coatings enables to avert or reduce the intensity of different types of wear and destruction, usually typical of constructions exploitation real conditions. The multielements and multiphase compositions formation allows to get so called "nanocomposite coatings" with extreme hardness value and other improved physical characteristics [1].

Multiphase cathodes or multiphase sputtering targets and, correspondingly, arc discharge evaporation method [2] or magnetron sputtering method [3] can be used for composite coating deposition. It is considered that in this case magnetron sputtering is more preferable, which, in contrast to arc discharge method, is not connected to the problem of local thermomechanical stresses, appearing in multiphase material, and premature cathode destruction. In known to us research works on the nanocomposite coating structures formation [1, 3, 4], the magnetron sputtering method was also used.

At the same time, it is known that there are also difficulties in the magnetron deposition technology while sputtering chemical compounds, e.g. sputtering rate decreasing in comparison to the process of metals sputtering belonging to them [5, 6]. But potentially this problem can be solved, and it was shown, e.g. in the work [6], in which magnetron unit is additionally supplied with the ion source, sending high energy ions to the sputtering targets surface on the 45°.

In 90-s in many experiment-technological workings on surface material modification, a gas plasma generator based on non-self-sustained arc discharge with the hot cathode [7, 8, 9] was used. Such plasma generator provides a high-quality cleaning and surface activation before deposing the coating, modification of the near surface layer structure and characteristics (e.g. by ion-plasma nitration or carbidization), assisted effect on structure-phase state of the precipitable material of the coating itself [10].

The majority of the works on combine modifying treatment with the use of the premises plasma generator is done on the arc discharge deposition equipment [7–10]. It is possible to assume that its application is perspective in combination with magnetron sputtering coating, composite structure in the first place. The reasons of this supposition are the results of experimental research of modes of plasma, created by such plasma generator. In the work [7] it has been found out that along with the ion current high density, relatively high homogeneity of plasma distribution in the whole volume of work chamber is provided. Consequently, the assumption of possibility to influence in an assist way both the composite target magnetron sputtering process and the composite coating precipitable material characteristics simultaneously.

In the given work the research in non-self-sustained arc discharge plasma assist influence on the magnetron discharge modes, while sputterzing the composite Ti-B-Si target and, at the same time, on the compound and hardness of precipitable composite Ti–B–Si–N coating, is represented.

2. Equipment, Materials and Principles of the Experiment

The coatings magnetron sputtering units MIR-2 supplied with gas plasma generator with hot cathode was used in the research (Fig. 1).

Plasma generator 2 is coaxial with paired planar magnetron 1. Constructions fastening and rotating system 3 (material samples 4 in our case) allows a preliminary sample surface cleaning in the zone 5 of the gas-discharge plasma highest density, and then depose the coating with magnetron sputtering with gas-discharge plasma concurrent influence on the depositing material in zone 6 of work chamber 7. X-ray analysis of composite material of magnetron target,

made by self-propogation high-temperature synthesis methods with simultaneous compacting, has shown that it consists of the Ti–B, Ti B_2, Ti_5 Si_3 phases mixture. Such sputtering target compound with the inevitable oxidation of its surface layer makes magnetron discharge initialization difficult at usual (recommended by the MIR-2 developers) process modes.

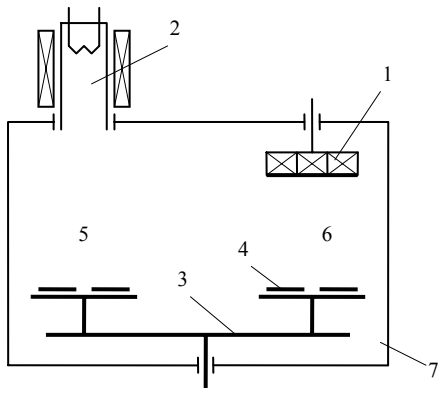

Fig. 1. Scheme of magnetron sputtering units MIR-2 with gas plasma generator

First of all, the research in non-self-sustained arc discharge plasma effect on magnetron discharge voltage-current characteristics when sputtering the composite Ti–B–Si target at different working gas (argon) pressure values in the range of $3.8 \cdot 10^{-2}$ to $1.5 \cdot 10^{-1}$ Pa was held. The gas plasma assisted influence on magnetron discharge voltage-current characteristics when using reactive argon+ nitrogen gas mixture has also been analyzed.

In the second place, the argon+ nitrogen gas plasma (argon pressure is $8.2 \cdot 10^{-2}$ Pa, general gas mixture pressure is $1.3 \cdot 10^{-1}$ Pa) assisted influence on the Ti–B–Si–N and Ti-N depositing coatings compound and micro hardness was being analyzed. The coatings were being deposited concurrently on the hard alloy and steel samples polished up to Ra 0.2 with the same gas pressure value, a negative voltage on a 100 V substrate, without gas plasma generator switching on (at standard technology) and with discharge plasma assisting influence on depositing material in the process of sputtering.

The sample surface was preliminary cleaned in the argon plasma (zone 5) during 30 minutes at the 600 V substrate voltage. Then the coating was deposed in the zone 6 during 60 minutes at a 300 mm distance from the magnetron to the samples and the 300 ºC samples temperature.

On hard alloy samples (which own micro hardness is about 17 Гa) the hardness of Ti–N and Ti–B–Si–N coatings was measured. The coatings were deposed without plasma generator and with gas discharge plasma assisted influence at discharge current value 10 A, providing 0.5 mA/cm^2 ion current density both in magnetron target and coating deposition zones. On steel samples comparative coatings surface topology and their compound by X-ray spectrometry researches on the scanning electron microscope SEM-515 has been carried out.

3. Experiment Results

Figure 2 shows magnetron discharge with Ti–B–Si target voltage-current dependences at different values of argon pressure at comparing two variants: traditional (without plasma generator switching on, curves 1, 2) and with non-self-sustained arc discharge plasma assisted influence (curves 3, 4, 5).

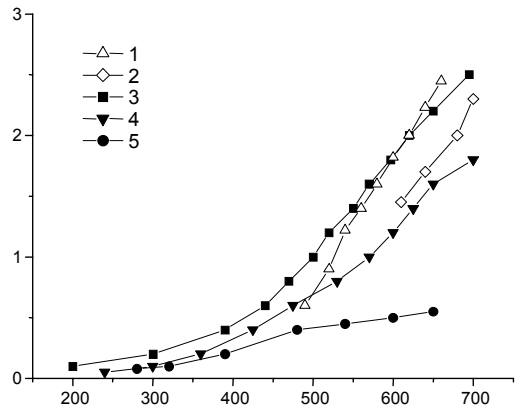

Fig. 2. Voltage-current characteristics of magnetron discharge without (1, 2) and with assisted plasma generator effect (3, 4, 5) at argon pressure: 1 – par = 13.14 · 10–2 Pa; 2 – $p_{ar} = 9.2 \cdot 10^{-2}$ Pa; 3 – $p_{ar} = 9.2 \cdot 10^{-2}$ Pa; 4 – $p_{ar} = 6.87 \cdot 10^{-2}$ Pa; 5 – $p_{ar} = 5.3 \cdot 10^{-2}$ Pa

Researches have shown that without gas-discharge plasma assisted influence the bottom argon pressure value, which causes magnetron charge initiation, makes about $9{,}2 \cdot 10^{-2}$ Pa at more than 600 V voltage values on a composite target (curve 2). At the same argon pressure ($9{,}2 \cdot 10^{-2}$ Pa) magnetron discharge with assisted effect of plasma generator is initiated at 200 V (curve 3), and current discharge values, in this case, exceed identical magnetron discharge parameters without plasma generator at equal voltage values (compare curves 2 and 3). Additional plasma generator influence (even at comparatively low gas discharge plasma current values – 10 A) maintains magnetron discharge at argon pressure lowering up to $5.3 \cdot 10^{-2}$ Pa (curve 5)

In our opinion, the totality of received research data is possible to interpret as «non-self-sustained magnetron discharge ».

Comparison of magnetron discharge current dependences on argon pressure for two process variants (without and with gas discharge plasma assisted influence) at fixed potential values 540 V and 600 V on a composite target (Fig. 3) confirms the above-stated results.

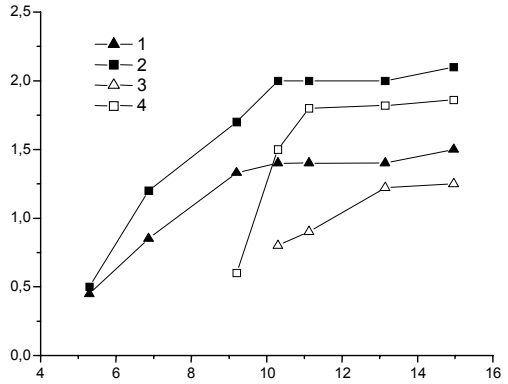

Fig. 3. Dependence of magnetron discharge current on gas pressure values with assisted plasma generator (1, 2) and without plasma generator (3, 4): 1 – U = 540 V; 2 – U = 600 V; 3 – U = 540 V; 4 – U = 600 V

Thus, it is possible to note, that even in saturation modes (at working gas pressure more than 10^{-1} Pa) magnetron discharge current values with assisted plasma influence noticeably surpass current discharge values at usual target sputtering process.

In applied works a great part is occupied with the processes of reactive magnetron deposition with the use of argon (gas with high sputtering ability) and reactionary-active gas (for example, nitrogen for synthesizing nitrides on a substrate) mixtures. Our aim was to form composite coatings of nitro-boride-silicide type. Thus, in some cases it is necessary to lower the relative inert gas content in a working mixture, while its presence in a composite coating, which is being formed, can worsen its physics-mechanical properties.

The researches of magnetron discharge voltage-current characteristics with the use of Ti–B–Si target and gas argon mixtures with nitrogen has once more confirmed the positive plasma generator influence on the magnetron sputtering processes. As well as in the previous experiments, at all the other equivalent conditions magnetron discharge current values with assisted gas discharge plasma noticeably surpass usual magnetron discharge current value. Besides, it's established that in the case of assisted magnetron discharge the lowering of argon content in gas mixture from 70% (usual ratio in MIR-2-technology) to 25–30% doesn't virtually change its voltage-current characteristics. Magnetron discharge with additional plasma generator influence has a high level of voltage-current characteristics even at this obvious reactionary gas predominance in the working mixture.

Table 1 shows the measurement of micro hardness of Ti-N and Ti-B-Si-N coatings deposed on the hard alloy without and with the gas discharge assisted influence at all the identical process parameters (working gas mixture composition, pressure, temperature, voltage at the substrate, sputtering time) results. The measurements are performed at two values of the stress on diamond pyramid P = 0.4N and P = 0.2N.

Table 1. The values of microhardness coatings, deposed on the substrate with and without assisted plasma generator influence

Coating type	With or without plasma generator	Value of micro hardness GPa at P = 0.4 N	Value of micro hardness GPa at P = 0.2 N
Ti–N	Without plasma generator	18.57	23.86
	With plasma generator	21.19	22.78
Ti–B–Si–N	Without plasma generator	17.7	19.4
	With plasma generator	20.66	23.81

As it's clear from the analysis of the table, the assisted influence of the plasma generator on the deposed material microhardness is found in both examined coatings. With quite high stress on diamond pyramid 0.4N the measured value of thin (about 1 μm) coating, which was deposed using traditional technology without plasma generator, practically coincides with the substrate micro hardness and makes about 17.7 and 18.57 GPa for the coatings Ti–B–S–N and Ti-N correspondingly. In the case of the assisted arc discharge plasma influence measured at the stress 0.4N on the pyramid the micro hardness value of the Ti–B–Si–N coating increases up to 20.66 GPa, and of the Ti–N coating – up to 21.19 GPa. When decreasing the stress on the diamond pyramid to 0.2 N the little value of the substrate hardness, as would be expected, influences the measured coatings hardness to a lesser degree. The micro hardness values in the range of 19.4–23.86 GPa, surpassing the identical indexes at the stress on the 0.4N pyramid for all comparable pares were taken.

As well as in the previous measurements, positive plasma generator influence (increase of microhardness from 19.4 up to 23.81 GPa) on the Ti–B–Si–N coating is confirmed again. And only in one of the four pairs (Ti–N deposition with or without plasma generator assisted influence at the stress on the pyramid 0.2N), which were compared, positive effect of gas discharge assistance was not set. We think that it may be caused by partial loosening of the Ti–N coating surface in the process of deposition with additional bombardment by argon ionized atoms, which has its effect at little depth of diamond pyramid penetration in the examined material.

The analysis of two aforesaid coating types by X-ray spectrometry has shown that in the case of plasma generator assisted influence the nitrogen concentration in the deposed compounds increases by some per cents. Thus, coatings hardness changing can be caused by radiation bombardment at gas discharge plasma influence and by increase of the effectiveness of reactionary gas (nitrogen) on account of its additional ionization, as well.

4. Conclusion

On the grounds of the complex analysis of obtained results the principle possibility of joint work of magnetron and gas plasma generator on the basis of non-self-sustained arc discharge with hot cathode is set. Such plasma generator combined with magnetron sputtering unit in one working chamber allows realizing simultaneous assisted influence both on the magnetron discharge modes and on the compound and properties of deposed coating. It is evident that such assisted influence is caused by the high degree of gas ionization in conditions of arc discharge, relatively high current density and homogeneity of plasma distribution.

The revealed double effect of assisted influence has a great importance both for the simplification of combined technological complex and for effectiveness increase of modifying treatment of material surfaces.

Positive arc discharge plasma assisted influence becomes extremely apparent when using composite targets, representing previously synthesized chemical compounds. In this case, initialization of magnetron discharge at usual modes recommended by the MIR-2 developers is complicate. Additional plasma generator switching on allows decreasing the voltage of its initializing and working pressure of gas mixture, improving voltage-current characteristics and magnetron sputtering process control.

We think that in this case, it's possible to characterize this effect as "non-self-sustained magnetron discharge" which is maintained by arc discharge plasma even in those ranges of voltage and pressure values at which the single magnetron discharge is not initialized.

The revealed assisted plasma arc discharge influence on the increase of content of reactionary gas elements in deposed coating, and also on the change of its hardness, prove the great potential possibilities of combined methods based on simultaneous use of magnetron unit and gas plasma generator with hot cathode. That is why, we consider that gas plasma generator and magnetron should be combined in one magnetron sputtering construction with assisted effect of gas discharge plasma. It will allow, to our minds, to improve voltage-current characteristics and effectiveness of the process of modifying treatment.

5. References

[1] J. Misil, J. Vleek, *in: Pros.5th Conf. on Modification of Materials with Particle Beam and Plasma Flows*, 2000, pp. 393–398.

[2] S. Sergeev, V. Savostikov, A. Tabachenko, *in: Proc. 4th Conf. on Modification Properties of Construction Materials with Particle Beams*, 1996, pp. 25–26.

[3] D. Shtaneki, E. Levashov, A. Sheveiko, *Rus. University Proceedings. Non-ferrous Metallurgy* **1**, 67–72 (1999).

[4] S. Shirjaev, M. Atamanov, M. Guseva et al., Rus. Physics and Chemistry of Materials Treatment **3**, 33–37 (2002).

[5] *Scientific-and-engineering Progress in Machine-building*, 9, Moscow, ICSEI, 1989, pp. 38–53.

[6] S. Janin, V. Krivibokov, V. Zhukov, M. Lelekov, *in: Pros. 6th International Conf. Modification of Materials with Particle Beams and Plasma Flows*, 2002, pp. 544–546.

[7] D. Borisv, N. Koval, P. Shanin, Rus University Proceedings. Physics **3**, 115–120 (1994).

[8] A. Schumikov, O. Polunina, V. Akifjiev, *in: Pros. 4th All-Russian Conf. on Modification Properties of Construction Materials with Particle Beams*, 1996, pp. 400–401.

[9] D. Borisov, I. Goucharenko, N. Koval and others, *in: Pros. 4th All-Russian Conf. on Modification Properties of Construction Materials with Particle Beams*, 1996, pp. 429–431.

[10] A. Tyumentsev, A. Korotaev, Yu. Pinzhin, N. Koval, M. Shanin, *in: Pros.5th Conf. on Modification of Materials with Particle Beam and Plasma Flows*, 2000, pp. 442–446.